Solera
1610 Sismet Road, Mississauga, Ontario L4W 1R4, Canada
Toll Free: 1.877.765.3722 Fax: 905.457.1115 www.soleracorp.com

Date	
Quote #	
Project Name	
Type	

PHARE - Bollard

Description:

PHARE is designed to add an exceptional touch to pathways. Various optical systems are available to suit the space.

Name		Engine		Lumens		CCT		Electrical		Mounting		Lens		Pattern		Options		Finish
	-		-		-		-		-		-		-		-		-	

Name	Light Engine		Source Lumens(LED)(5000K)	Color Temp	Electrical	
PHARE-6	6	36 LED (Max)	4680	3000K	UNV	120-277V
PHARE-8	8	42 LED (Max)	5460	3500K	HLV	347-480V
				4000K		
				5000K		
		Contact for custom	*Contact for custom*	*Contact for custom*		

Mounting		Lens		Light Pattern		Options		Finishes	
ABT	Anchors, bolts and template	OAL	Opal acrylic lens (Std)	6W	6 Windows, type V	TP	Tamperproof hardware	BL	Black
				3W	3 Windows, type III	TS	Tamperproof screws	WH	White
				180	180 degrees	PC	Button photocell	SG	Silver Grey
						SF	Single fuse	BZ	Bronze
						GFR	Ground fault receptacle	CC	Custom Color
						RGBW	Programmable color changing LEDs		See website for custom colors. Contact factory for physical samples.

- Lumens are based on max wattage & 5000K CCT
- IES files available upon request
- Std - Standard Offering

Since product development is an on-going process, Solera reserves the right to change the information on this spec sheet.

Date Modified: 09-05-2019

1610 Sismet Road, Mississauga, Ontario L4W 1R4, Canada
Toll Free: 1.877.765.3722 Fax: 905.457.1115 www.soleracorp.com

Dimensions & Mounting:

Please note that drawings are not to scale.

Side view

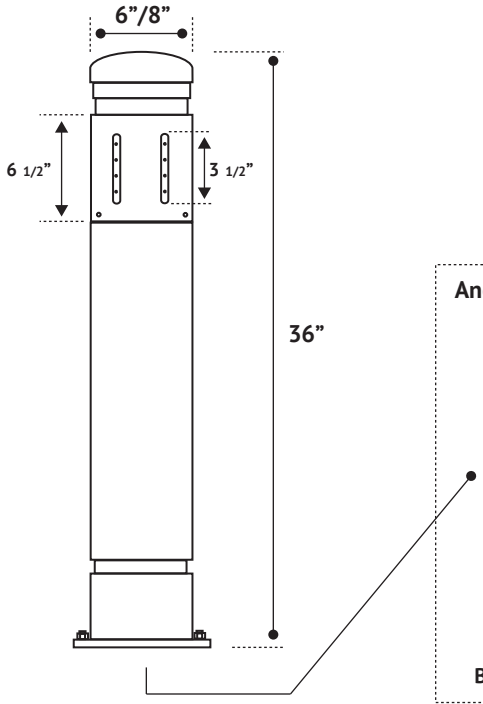

Anchoring detail

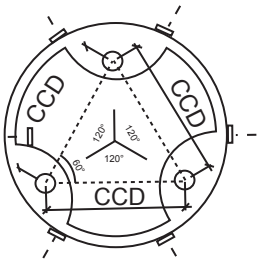

Shaft diameter	BCD	CCD
6” diameter	4”	3 1/2”
8” diameter	5 1/5”	4 1/2”

Bolt size: 1/2” X 12” X 1 3/8”

Listing:

Complies to CSA and UL standards.

Polar Graph:
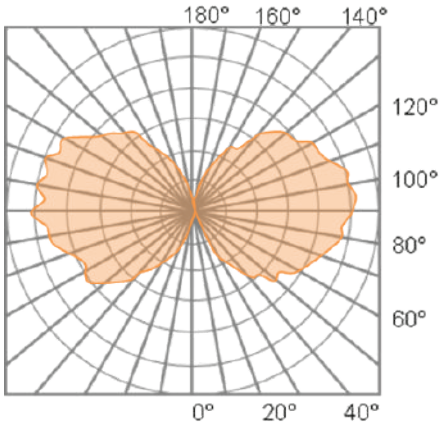
TY5