Solera
1610 Sismet Road, Mississauga, Ontario L4W 1R4, Canada
Toll Free: 1.877.765.3722 Fax: 905.457.1115 www.soleracorp.com

Date	
Quote #	
Project Name	
Type	

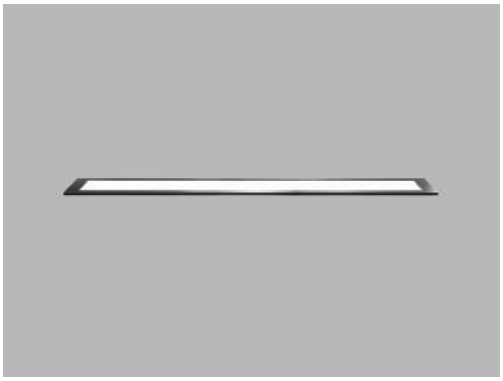

EGR - Ground Recessed

Description:

Linear in-ground recessed fixture consisting of a stainless steel trim and glass lens. Protection class IP67.

Name		Engine		Lumens		CCT		Electrical		Mounting		Lens		Pattern		Options		Finish
	-		-		-		-		-		-		-		-		-	

Name	Light Engine		Source Lumens(LED)(5000K)	Color Temp	Electrical	
EGR-1	EGR-1	12 LED (Max)	1560	3000K	UNV	120-277V
EGR-2	EGR-2	12 LED (Max)	1560	3500K	HLV	347-480V
EGR-3	EGR-3	36 LED (Max)	4680	4000K		
EGR-4	EGR-4	36 LED (Max)	4680	5000K		
EGR-5	EGR-5	48 LED (Max)	6240			
EGR-6	EGR-6	48 LED (Max)	6240			
EGR-7	EGR-7	60 LED (Max)	7800			
EGR-8	EGR-8	60 LED (Max)	7800			
	Contact for custom		*Contact for custom*	*Contact for custom*		

Mounting		Lens		Light Pattern		Options		Finishes	
IG	In-ground recessed	CG	Clear glass lens (Std)	EGR-1	Symmetric	SD	Step dimming	SS	Stainless steel (Std)
		FG	Frosted glass lens	EGR-2	Asymmetric	MS	Motion sensor	BL	Black
				EGR-3	Symmetric	SF	Single fuse	WH	White
				EGR-4	Asymmetric	TS	Tamperproof screws	SG	Silver Grey
				EGR-5	Symmetric	TP	Tamperproof hardware	BZ	Bronze
				EGR-6	Asymmetric	GS	Glare shield		
				EGR-7	Symmetric	EM	Emergency battery		
				EGR-8	Asymmetric				

- Lumens are based on max wattage & 5000K CCT
- IES files available upon request
- Std - Standard Offering

Since product development is an on-going process, Solera reserves the right to change the information on this spec sheet.

Date Modified: 09-23-2019

Solera
1610 Sismet Road, Mississauga, Ontario L4W 1R4, Canada
Toll Free: 1.877.765.3722 Fax: 905.457.1115 www.soleracorp.com

Dimensions & Mounting:

Please note that drawings are not to scale.

	Distribution	A
EGR-1	SYM	15 2/5”
EGR-2	ASYM	15 2/5”
EGR-3	SYM	38 3/8”
EGR-4	ASYM	38 3/8”
EGR-5	SYM	50”
EGR-6	ASYM	50”
EGR-7	SYM	61 7/8”
EGR-8	ASYM	61 7/8”

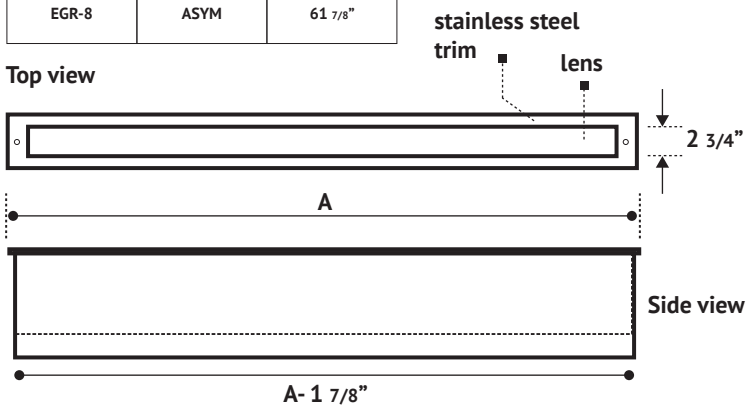

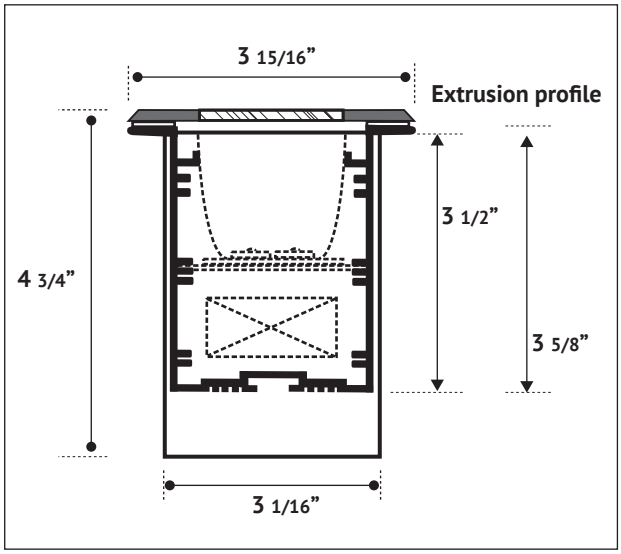

Listing:

Complies to CSA and UL standards.

Polar Graph:

SYM

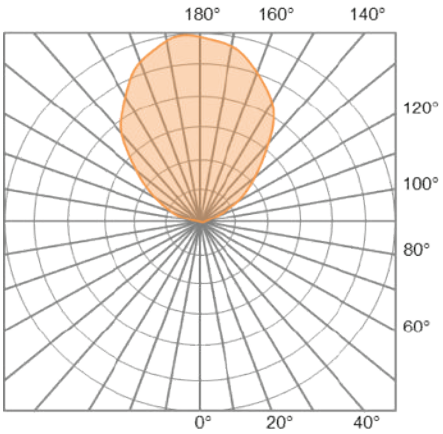
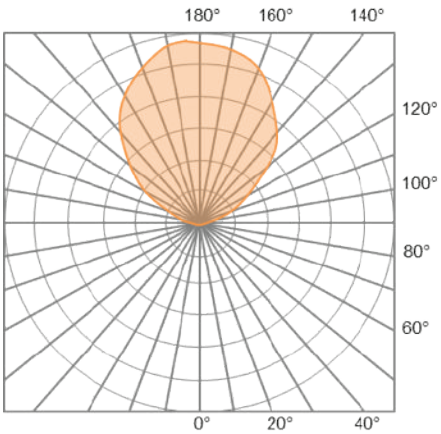
ASM