Solera
1610 Sismet Road, Mississauga, Ontario L4W 1R4, Canada
Toll Free: 1.877.765.3722 Fax: 905.457.1115 www.soleracorp.com

Date	
Quote #	
Project Name	
Type	

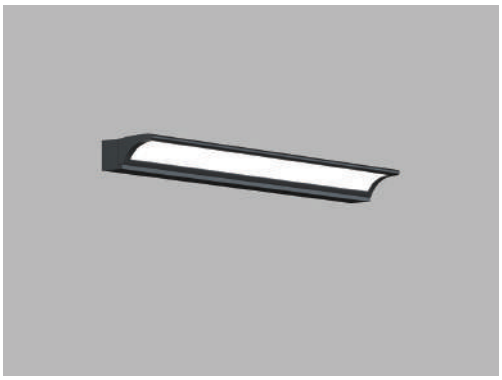

CURVE - Wall Mount

Description:

Extruded aluminum housing construction with aluminum end caps. Silicone sealed matte velvet lens to exclude bugs and dust. All external hardware is stainless steel.

Name		Engine		Lumens		CCT		Electrical		Mounting		Lens		Pattern		Options		Finish
	-		-		-		-		-		-		-		-		-	

Name	Light Engine		Source Lumens(LED)(5000K)	Color Temp	Electrical	
CURVE-24	24	20 LED (Max)	2339	2700K	UNV	120-277V
CURVE-36	36	30 LED (Max)	3875	3000K	HLV	347-480V
CURVE-48	48	40 LED (Max)	7044	3500K		
CURVE-60	60	54 LED (Max)	8794	4000K		
CURVE-72	72	68 LED (Max)	10555	5000K		
		Contact for custom	*Contact for custom*	*Contact for custom*		

Mounting		Lens		Light Pattern		Options		Finishes	
WM	Wall mount	MV	Matte velvet lens	D	Down light (Std)	DM	0-10V dimming	BL	Black
				UD	Up and Down light	DM1	1% dimming	WH	White
								SG	Silver Grey
						TP	Tamperproof hardware	BZ	Bronze
						WL	Wet location	CC	Custom Color
						PC	Button photocell		See website for custom colors. Contact factory for physical samples.
						EM	Emergency battery		

- Lumens are based on max wattage & 5000K CCT
- IES files available upon request
- Std - Standard Offering

Since product development is an on-going process, Solera reserves the right to change the information on this spec sheet.

Date Modified: 06-19-2019

Solera
1610 Sismet Road, Mississauga, Ontario L4W 1R4, Canada
Toll Free: 1.877.765.3722 Fax: 905.457.1115 www.soleracorp.com

Dimensions & Mounting:

Please note that drawings are not to scale.

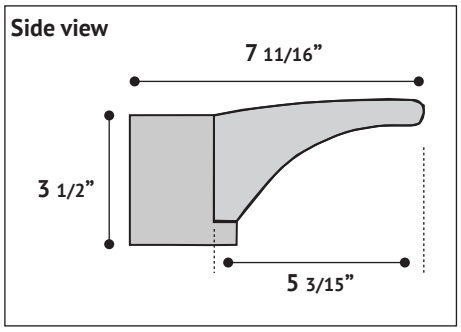

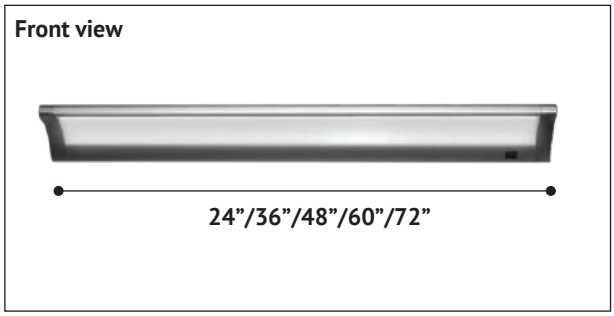

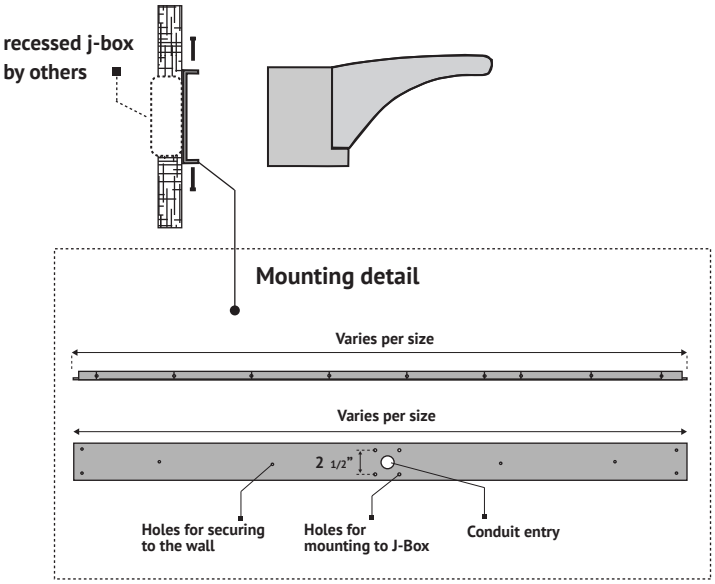

Listing:

Complies to CSA and UL standards.
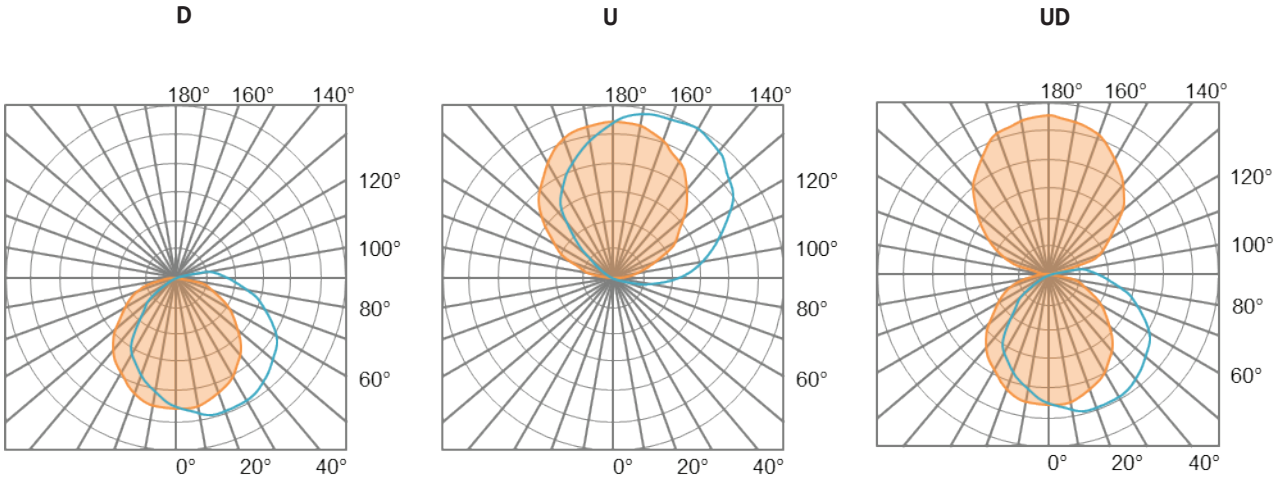
Polar Graph: